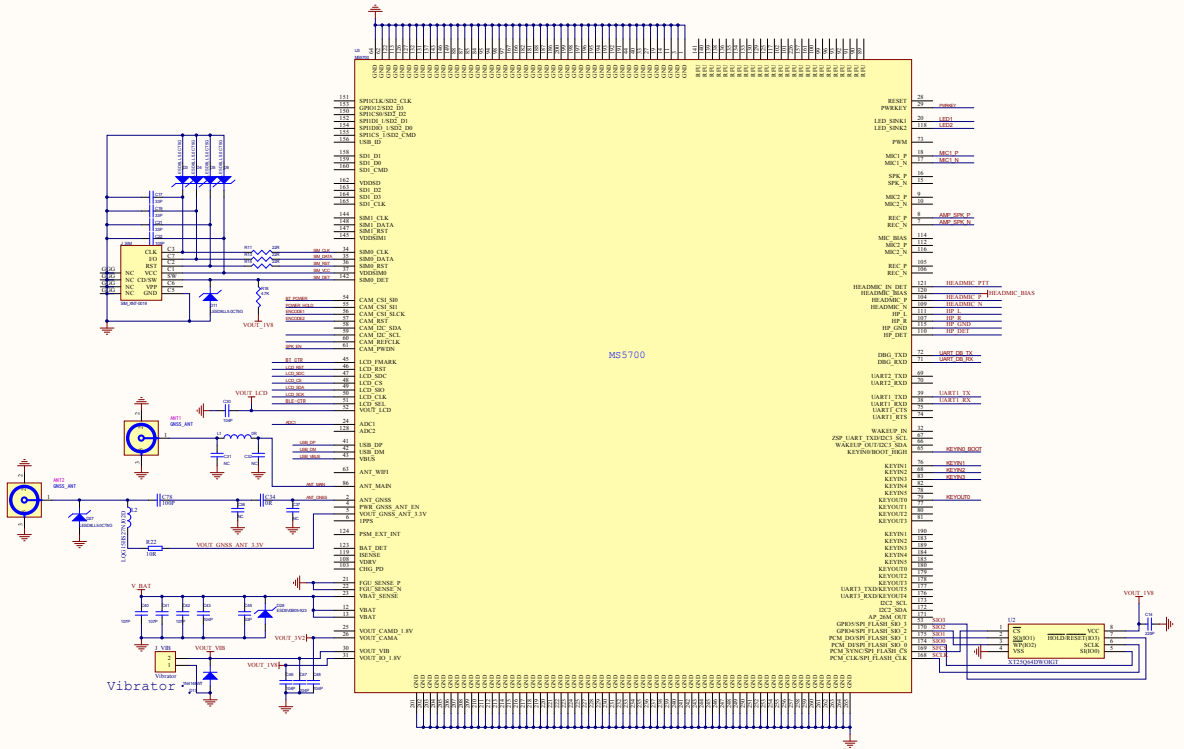

MODEM

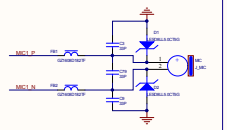

MAIN MIC

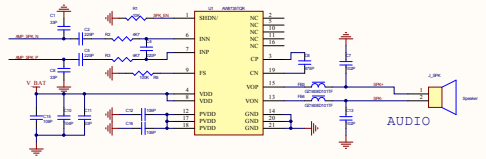

MAIN SPEAKER

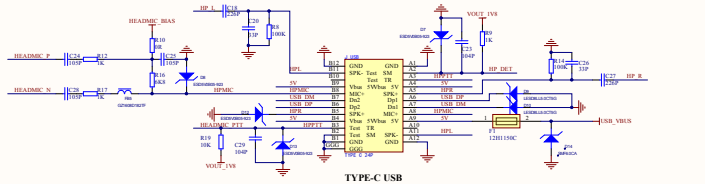

TYPE-C USB

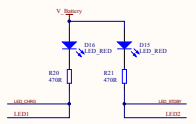

LED

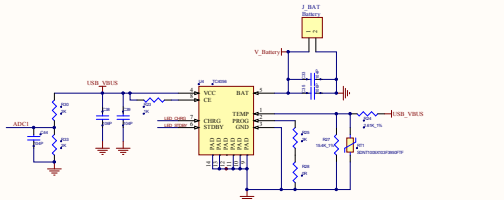

CHARGE

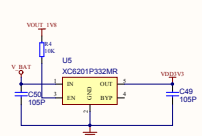

LDO

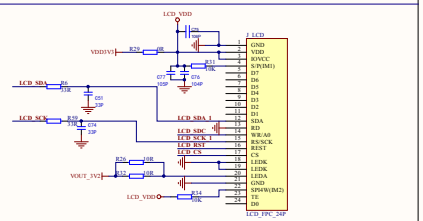

LCD

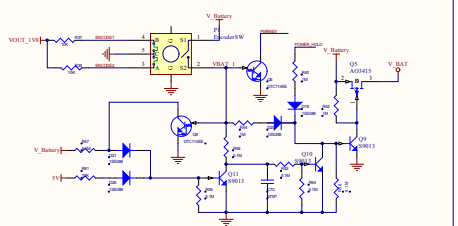

POWER KEY

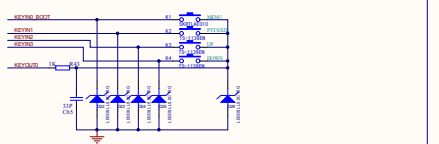

KEY

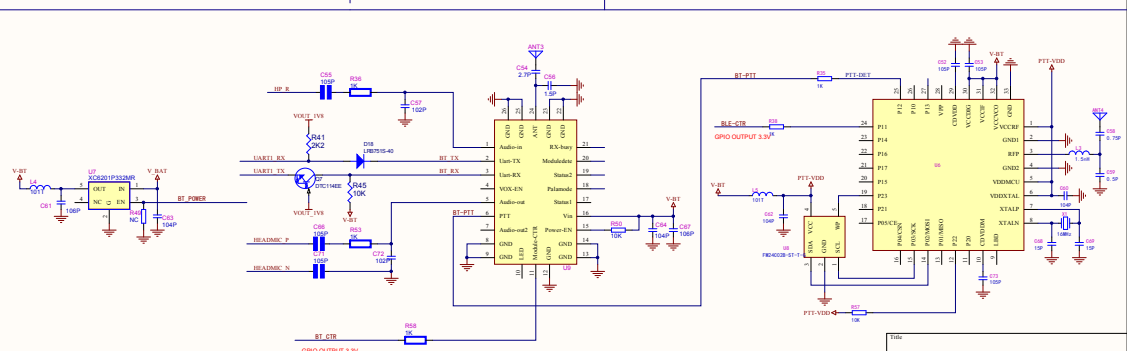

BT-AUDIO & BLE-PTT

Title	
Size: D	Number:
Revision:	
Date: 2022/1/24	Sheet of
File: Z-E_025V_MB_A.SchDoc	Drawn by: